# 43008-1875

**Horizontal trackset straight HOME bolted H=1875**

This information is subject to change. Check our website for updates. This document was generated on 2026-11-26 04:56 GMT...



| | |
|---|---|
| **Unit** | Pair |
| **Box** | 25 |
| **Pallet** | 50 |
| **Weight (kg)** | 8.34 |

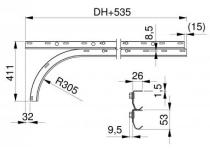


## Product description

This article comes in two different versions. Depending on the stock you will either receive V1 or V2. Below you will find a description of the version differences.

Please note that the rails have a slightly different geometry than our latest version, but remain 100% compatible with the HOME door system.

### 43007 & 43008 V1

- 2 identical rails
- Alignment profile 235037

### 43007 & 43008 V2

- 2 different rails
- Upper rail old design
- Lower rail (curve) with safety edge
- Alignment profile 235037

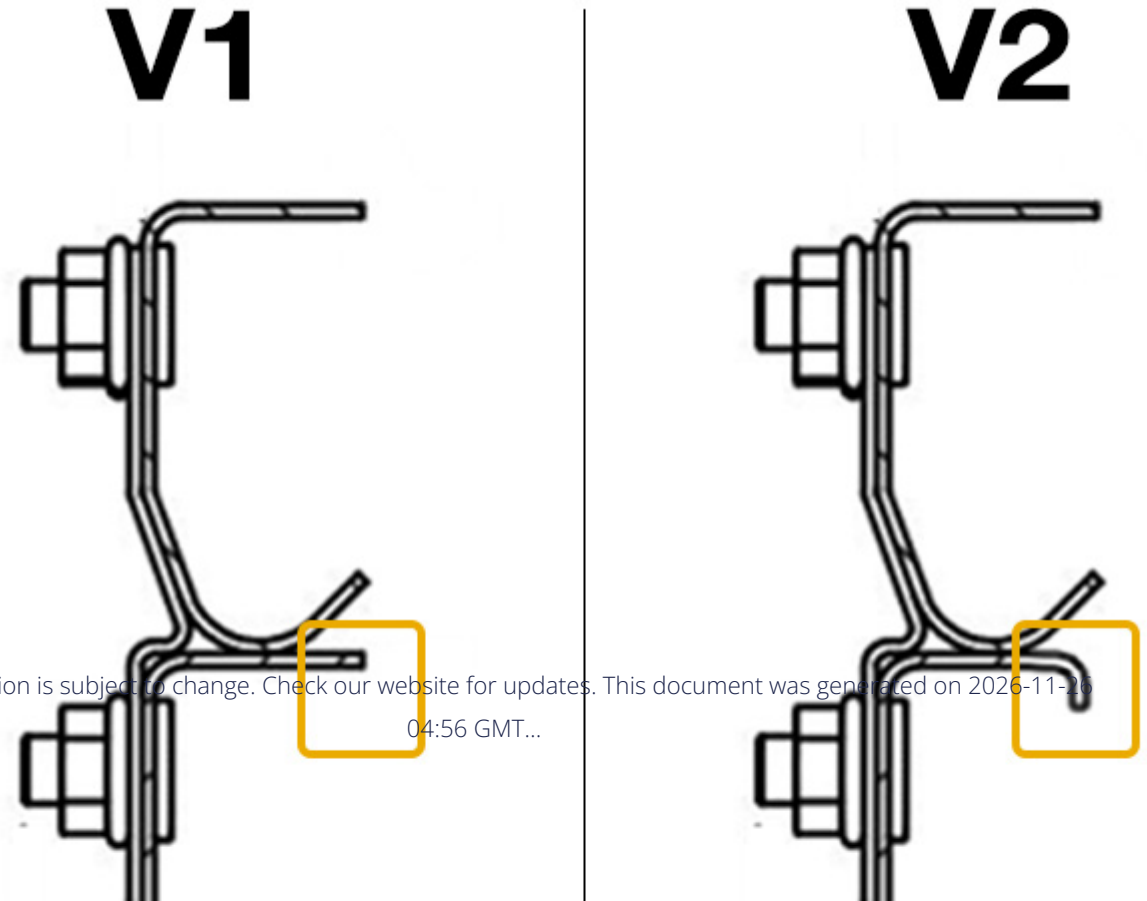


This information is subject to change. Check our website for updates. This document was generated on 2026-11-26 04:56 GMT...