43007-1875

Horizontal trackset with short alu. curve HOME H=1875

This information is subject to change. Check our website for updates. This document was generated on 2026-11-26 04:56 GMT...



Unit	Pair
Box	25
Pallet	50
Weight (kg)	8.32

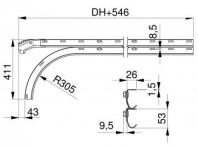

Product description

This article comes in two different versions. Depending on the stock you will either receive V1 or V2. Below you will find a description of the version differences.

Please note that the rails have a slightly different geometry than our latest version, but remain 100% compatible with the HOME door system.

43007 & 43008 V1

- 2 identical rails
- Alignment profile 235037

43007 & 43008 V2

- 2 different rails
- Upper rail old design
- Lower rail (curve) with safety edge
- Alignment profile 235037

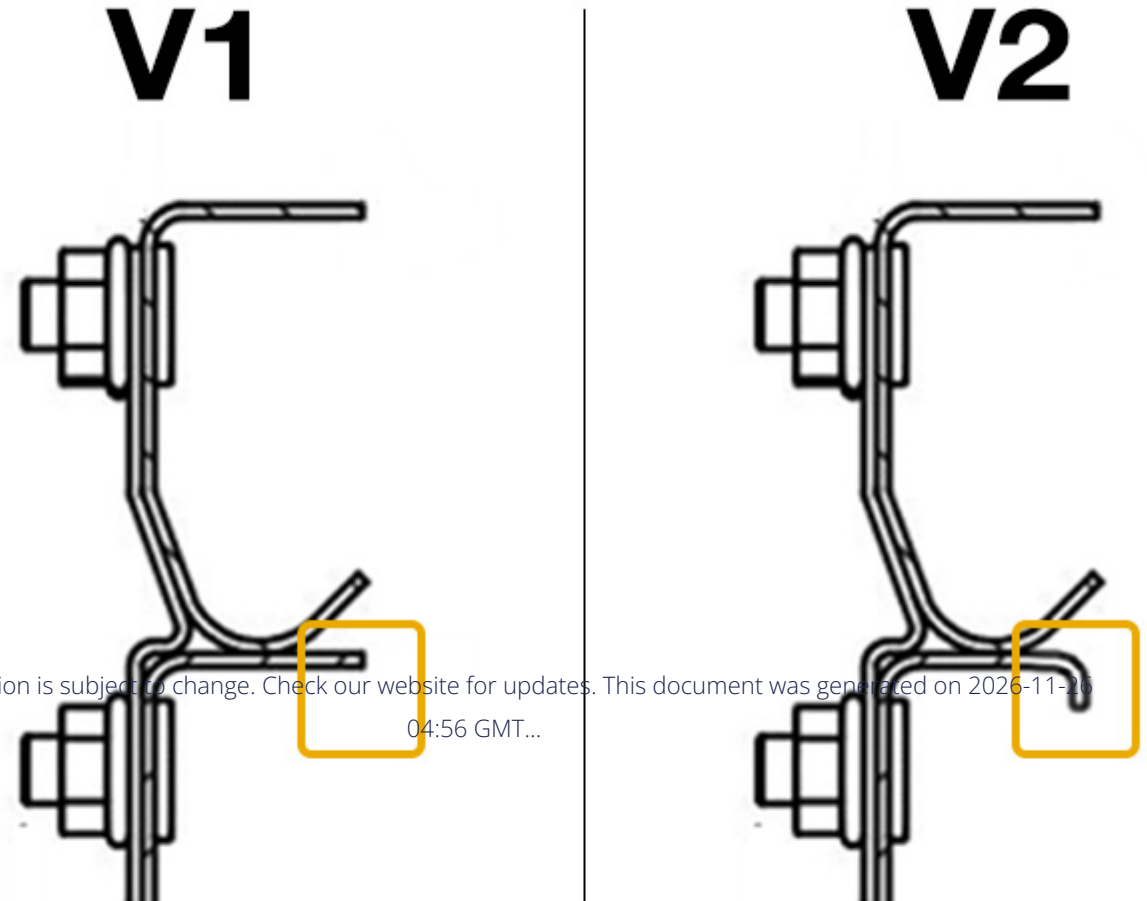

This information is subject to change. Check our website for updates. This document was generated on 2026-11-26 04:56 GMT...