115063

HOME-X Pre-tension cable connection adapter

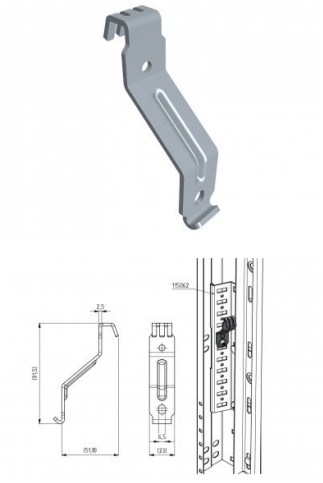

Unit	Piece
Box	300
Pallet	13500
Weight (kg)	0.05

Product description

Secures cable in pre-tensioned position by hooking collars. Not mandatory to discard after installation

Technical information

Thickness (mm)	2.5
Material	Galvanized steel
HOME-X	

This information is subject to change. Check our website for updates. This document was generated on 2026-11-26 01:24 GMT...